Laboratory plants

Verfahrenstechnische Anlagen GmbH

How to process products on the laboratory plant:

Feed composition clarification
Feed product conditioning
Database research for physical properties
Vacuum test of the laboratory plant
Heating temperature set point adjustment
Vacuum adjustment
cold trap chilling
Degassing step
Evaporation step
Cleaning of the plant

VTA
Verfahrenstechnische
Anlagen GmbH

VKL 70 Short Path Evaporators:

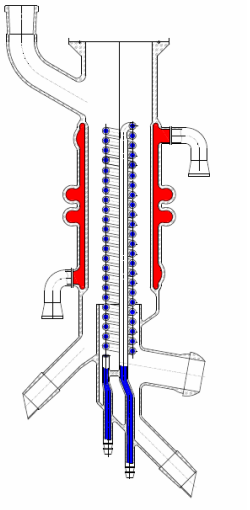

VKL 70-4

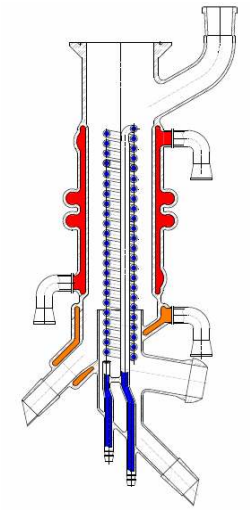

VKL 70-4 R

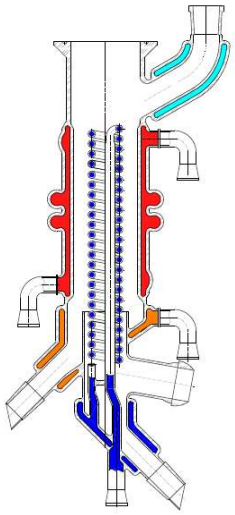

VKL 70-4 FDR

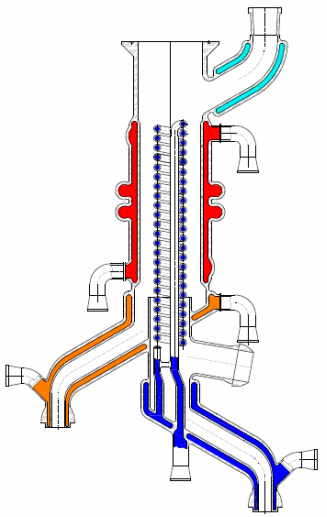

VKL 70-4 FDRR

VTA
Verfahrenstechnische
Anlagen GmbH

VDL 70 Wiped Film Evaporators:

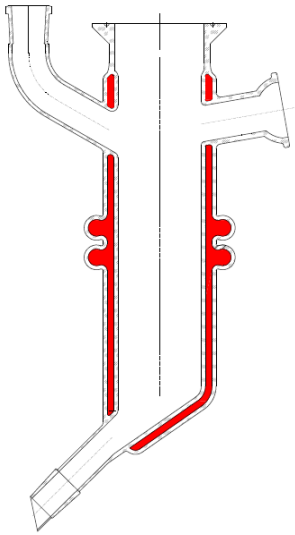

VDL 70-4

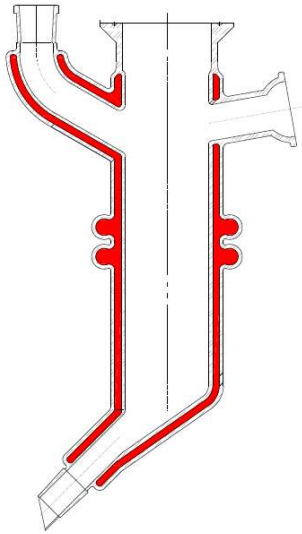

VDL 70-4 C

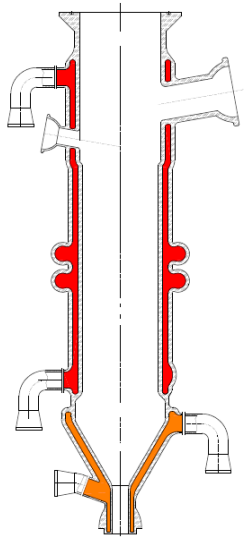

VKL 70-4 R

Laboratory plants

VTA
Verfahrenstechnische
Anlagen GmbH

Special sized Glass Evaporators:

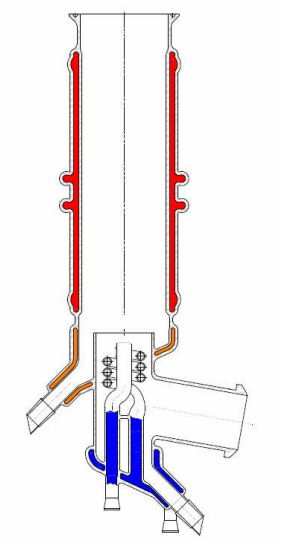

VKL 125-15

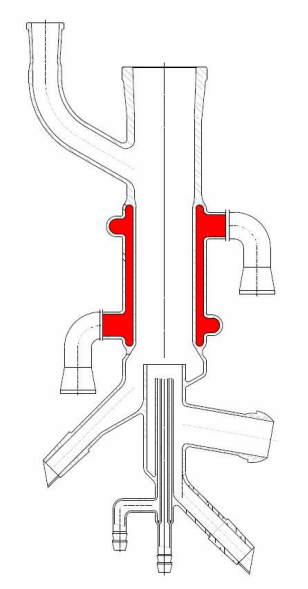

VKL 38-1

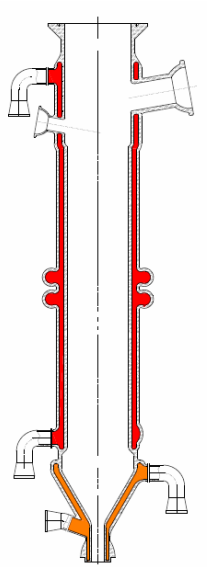

VDL 70-7

Verfahrenstechnische Anlagen GmbH

External condensers:

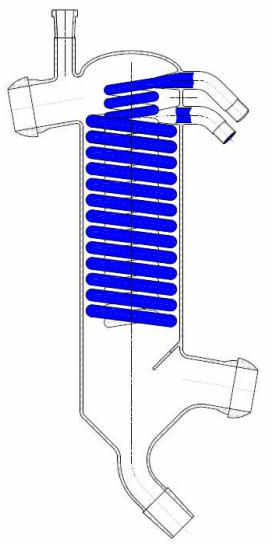

Standard

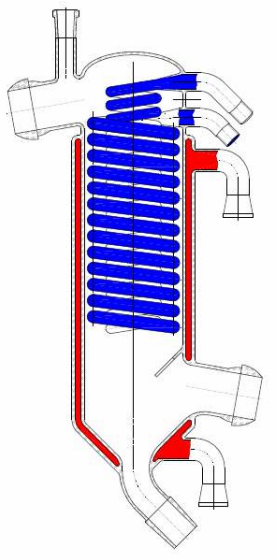

Heated condenser jacket

Laboratory plants

VTA
Verfahrenstechnische
Anlagen GmbH

Cold traps:

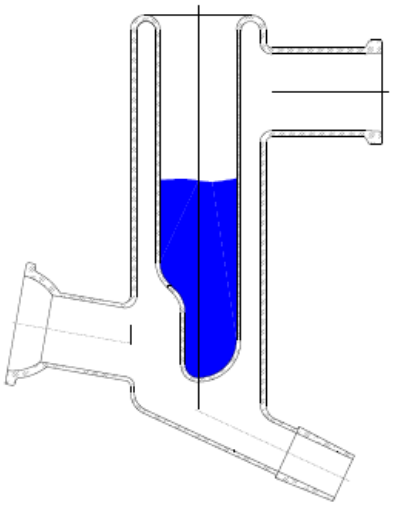

Dry Ice or
liquid N_2

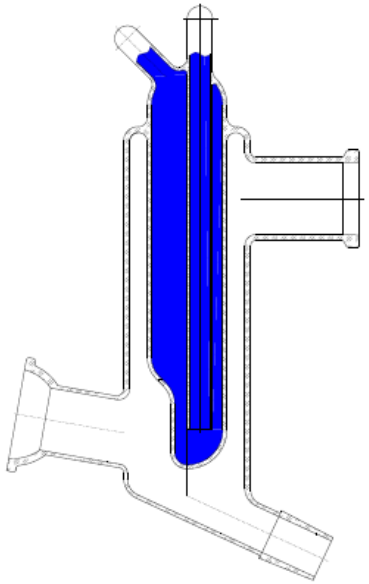

Liquid refrigerant

Laboratory plants

VTA
Verfahrenstechnische
Anlagen GmbH

Feeding Systems:

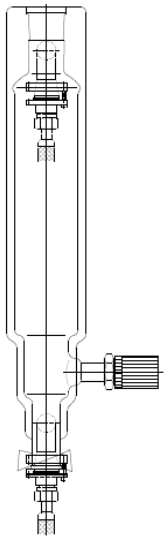

Dosing Vessel

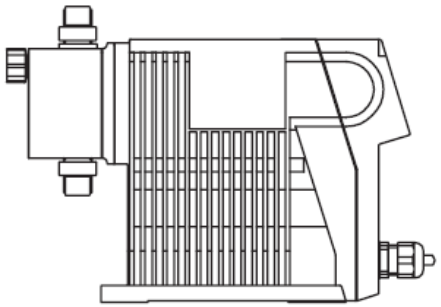

Membrane Pump

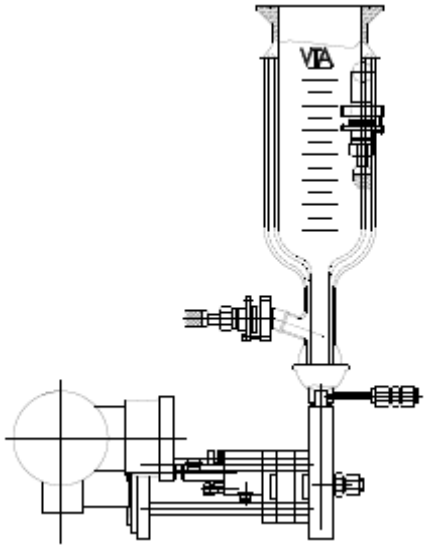

Gear Pump with
feed vessel

VTA
Verfahrenstechnische
Anlagen GmbH

Feeding Systems, VTA Gear Pump:

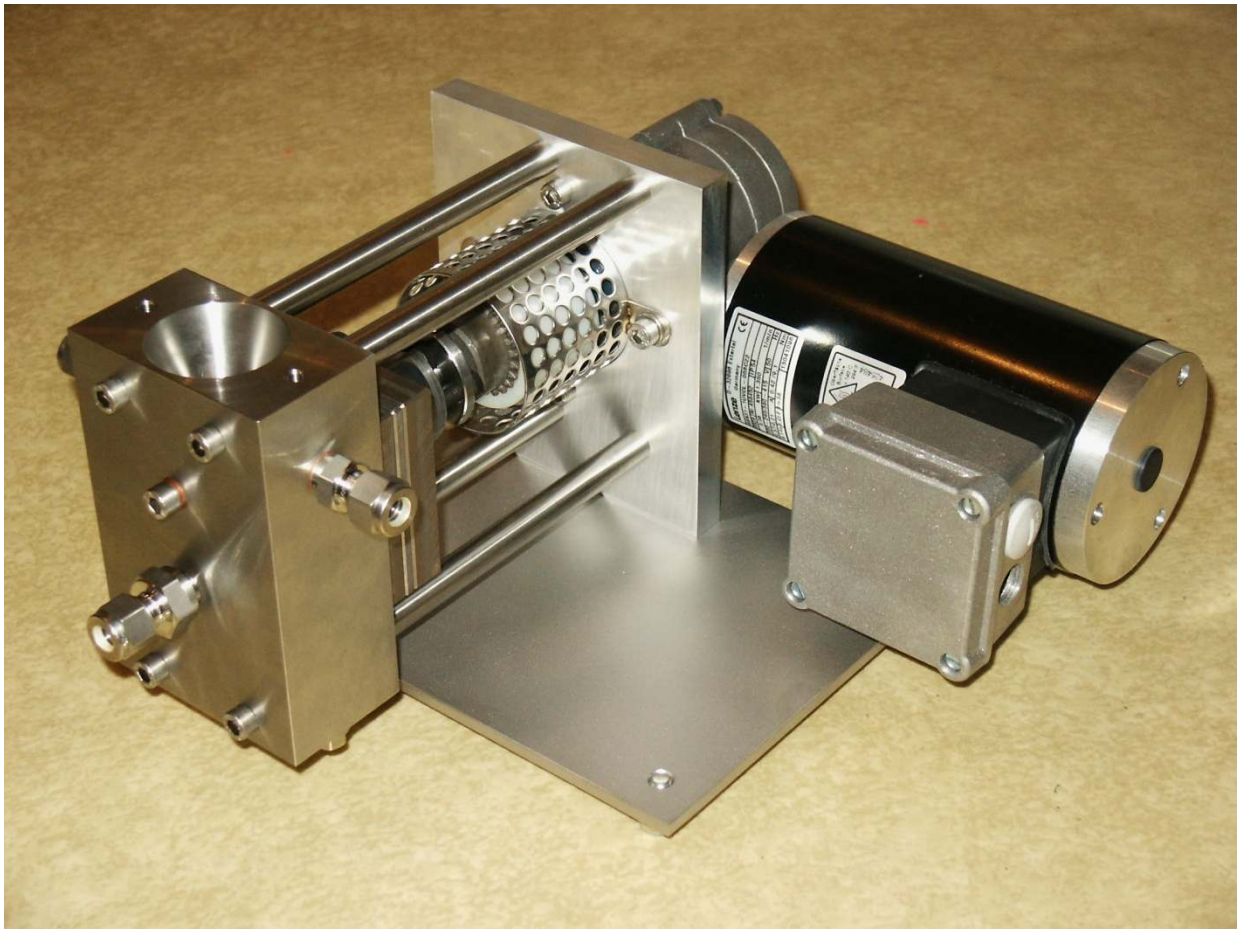

Laboratory plants

VTA
Verfahrenstechnische
Anlagen GmbH

Discharge Systems:

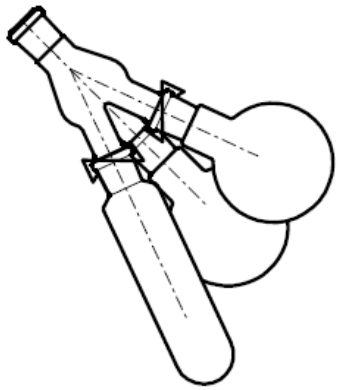

Triple Split
Distributor

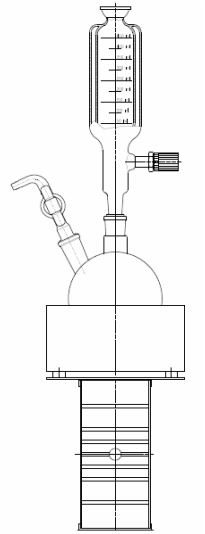

Intermediate
Buffer Vessel

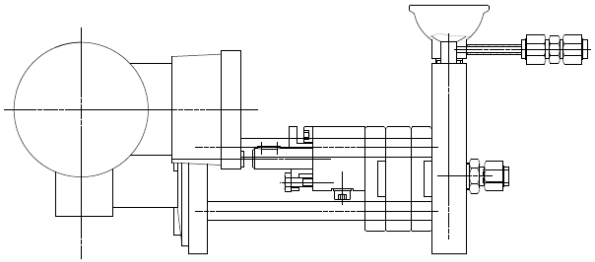

Discharge Pump

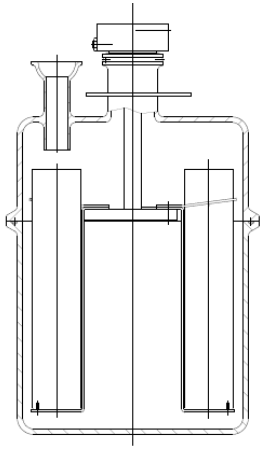

Carousel

Laboratory plants

Verfahrenstechnische Anlagen GmbH

Vacuum components:

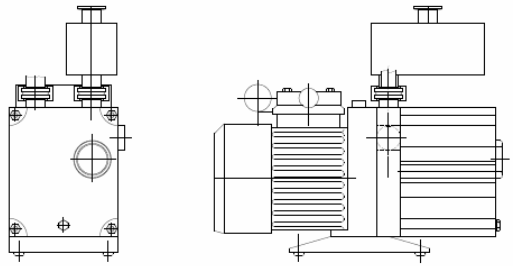

Rotary Vane
Pumpe

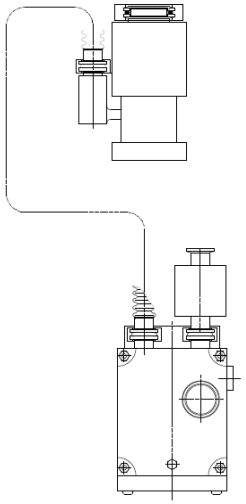

Combination with
oil diffusion Pump

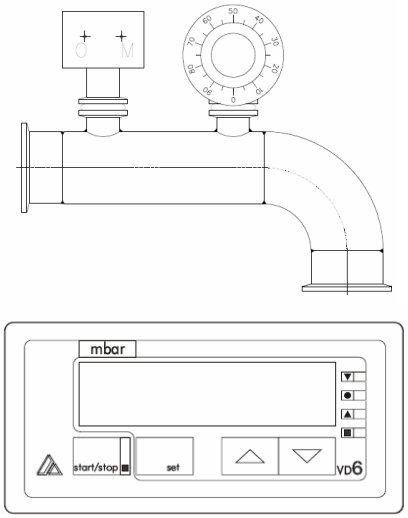

Pressure Gauge
Pressure Adjustment

Laboratory plants

VTA
Verfahrenstechnische
Anlagen GmbH

Standard Unit VKL 70-4:

